Weld Lathe Systems

Circumferential weld lathe systems are used to produce high quality welds with minimum distortion on circumferential (girth) weld joints for a wide variety of parts and part shapes. The weld joints can have various configurations, including butt, fillet, overlap, and joggle. Welding is typically performed from the external side of the weld joint, but internal welding is possible with special adaptations.

AMET® Weld Lathes are produced in a full range of weld lengths and three different models, Precision Benchtop, Heavy-Duty Bench, and Industrial, in order to meet each of our customer's specific application requirements.

Coupled with AMET's advanced weld controls, the lathes are highly customizable and versatile. They are configurable for circumferential welding, OD cladding, and even longitudinal welding. Additional weld heads can also be added so multiple welds can be performed simultaneously. Single and multi-pass welding can be performed using GTAW, PAW, VPGTAW, VPPAW, GMAW, FCAW, or SAW welding.

As standard, AMET® offers circumferential weld lathes with a weld length capacity from 18" to 236" (450 to 6000 mm) with diameters up to 60" (1500 mm) and weight capacity to 22,000 lbs. (10,000kg).

Benefits

AMET® Uses High Quality Components

- Precision bearings and rails provide smooth motion and accurate positioning of the torch tower and tailstock along the length of the lathe.
- Precision controls, +/- 1% of set speed, helps ensure repeatable weld head motion for dependable performance. This is especially beneficial for high volume part runs.
- High precision rotation drive provides the required motion for a wide range of components from aerospace engine parts to end cap welding on metal hoses.
- AMET® uses hi-flex cabling and flexible cable chain when appropriate to organize cables and extend service life.

End Use Examples

Steel Hose Manufacturing	Storage Tanks
Hot Water Tanks	Air Cylinders
Jet Engine Components	Hydraulic Cylinders
Pipe Fittings	HVAC Components
Fuel Tanks	Pressure Vessels
Steel Hose Manufacturing	Pipe Cladding

AMET® Inc., 355 Dividend Dr., Rexburg, ID 83440 USA - Tel: (208) 356-7274 - Fax: (208) 356 8932 - www.ametinc.com

AMET®

Precision Benchtop Lathe & Heavy-Duty Bench Lathe

Standard Features

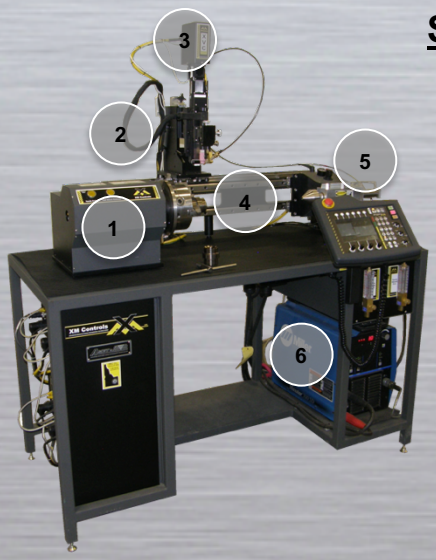

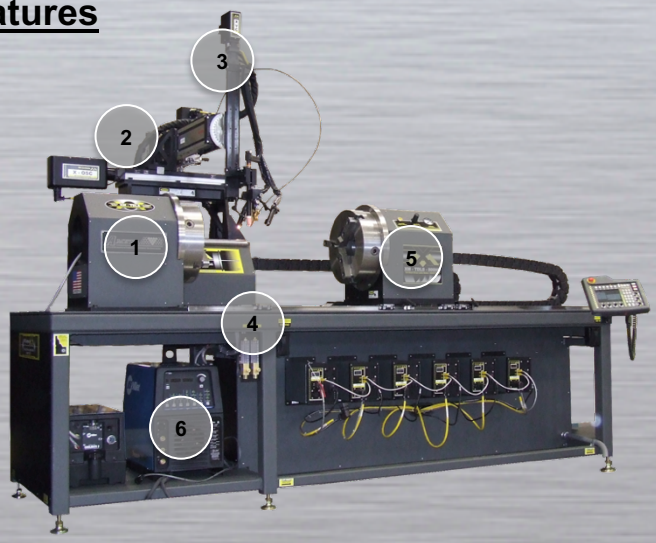

1. The precision headstock provides programmable and controllable rotation for part welding. The headstock features a manual 3-jaw chuck for holding the OD of parts up to 6 in (152 mm). The speed is controllable from 0 to 20 RPM.

2. A pneumatic, manual, or motorized slide is included for horizontal motion of the torch. When activated, the slide moves the torch towards and away from the centerline of the lathe. This motion can be programmed into the weld schedule to facilitate part loading and unloading, or controlled manually.

3. The vertical torch motion is provided by a precision motorized slide. The vertical motion is programmable for torch retraction after the weld to aid in part loading and unloading, and height adjustments for multi-pass welds.

4. Precision rails are included for both the tailstock and torch tower motion to ensure smooth and accurate positioning along the length of the lathe.

5. The tailstock features pneumatic clamping to help hold the parts in place during welding. The clamping is performed by a pneumatic cylinder that extends the tailstock horizontally towards the headstock to apply pressure to the parts being welded. The tailstock of the Precision Benchtop Lathe (Left) includes a live center to eliminate wobble during rotation and the Heavy-Duty Bench Lathe (Right) includes a faceplate with four tooling slots to provide mounting for tooling such as manual chucks or specialized tooling.

6. The lathe includes a workstation that provides a mounting location for the lathe assembly as well as the weld equipment. The welding power supply and other equipment are mounted beneath the workstation tabletop to provide a complete system that can easily be moved with a forklift. Only 1 (one) pneumatic hose, 1 (one) gas line, and 1 (one) power circuit are required for this system to operate.

Optional Features

- Offline Programming Software
- Additional Torch Tower
- Weld Screens
- Manual Tailstock Chuck
- Arc Viewing Camera
- Data Acquisition & Tolerance Checking
- AVC (Arc Voltage Control)
- PLC Interface for Additional Functions
- Customizable OD Capacity
- Virtual Alignment (Teach Mode)
- Integrated ID Purge / Backing Gas
- Mechanical Oscillation
- Magnetic Oscillation
- Spiral Path & Step-Index Cladding
- Bar Code Program Selection
- Synchronized Headstock & Tailstock
- Multiple Process Weld Head
- Additional Gases / Programmable Gas Control

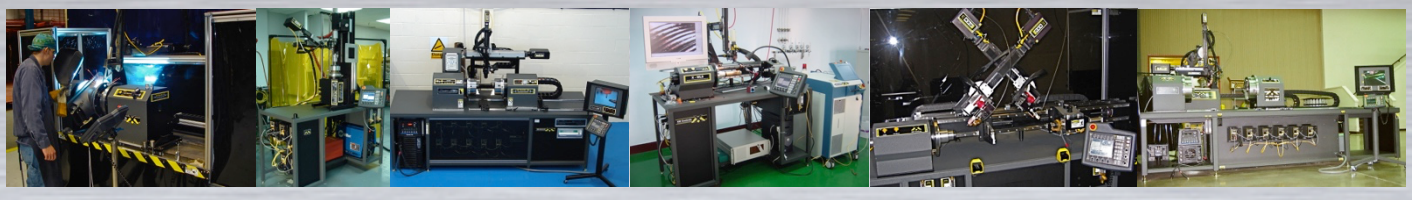

AMET® Inc., 355 Dividend Dr., Rexburg, ID 83440 USA - Tel: (208) 356-7274 - Fax: (208) 356 8932 - www.ametinc.com

AMET®

Industrial Weld Lathe Systems

Standard Features

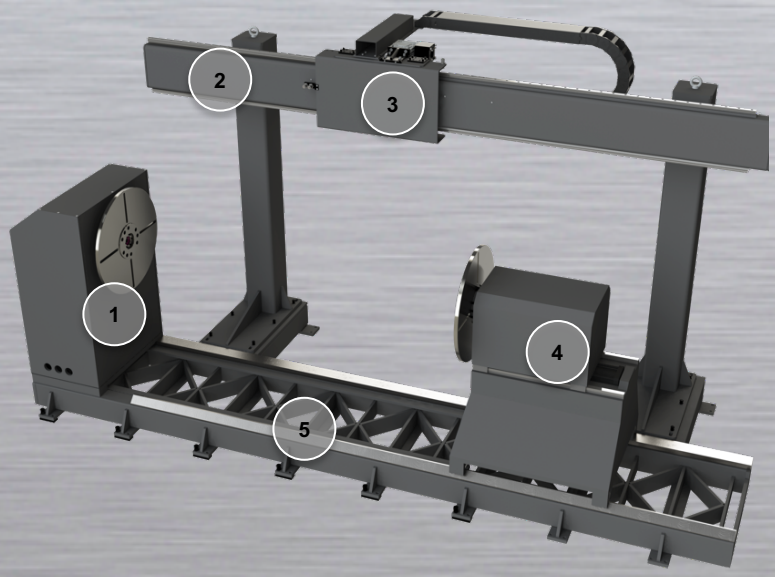

1. The headstock assembly provides programmable rotation for circumferential welding. The assembly is fixed into position at one end of the lathe base. A faceplate with four (4) tooling slots and a thru hole is included for adding specialized tooling or backing / purge gas capabilities.

2. A track and supports are included for mounting the travel carriage. The track is made of structural steel to provide rigid support and a long service life with the capacity to support up to two (2) carriages. Profiled linear rails are secured to the track for precision carriage motion.

3. A non-motorized carriage is included for positioning the weld head. The carriage rides along the length of the track and includes manual brakes for locking it into position. A cable carrier is included to protect and organize the hoses and cables routed to the weld head.

4. The tailstock assembly features idler rotation and includes a faceplate with four (4) tooling slots and a thru hole. The assembly is capable of manual motion along the length of the lathe base and includes manual locks to prevent movement during operation. Pneumatic clamping is included to help hold parts securely in place.

5. A sturdy base is included for supporting the entire lathe. The base includes leveling pads to ensure the lathe is level.

Optional Features

- Motorized Travel Carriage
- Power Tailstock Travel
- Tilting Headstock
- High Precision Headstock
- Tailstock Hydraulic Braking
- Additional Travel Carriage
- Offline Programming Software
- Grippers and Chucks
- Multiple Wire Weld Head
- Arc Viewing Camera
- Data Acquisition & Tolerance Checking
- AVC (Arc Voltage Control)
- PLC Interface for Non-welding Functions
- Virtual Alignment (Teach Mode)
- Integrated ID Purge / Backing Gas
- Mechanical Oscillation
- Magnetic Oscillation
- Spiral Path & Step-Index Cladding
- Bar Code Program Selection
- Synchronized Headstock & Tailstock
- Multiple Process Weld Head
- Part Support Idlers

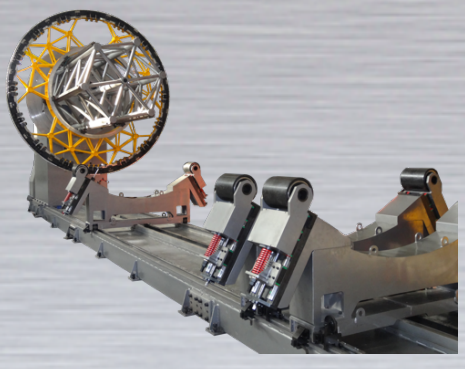

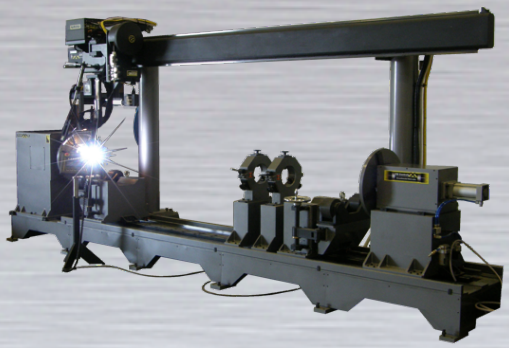

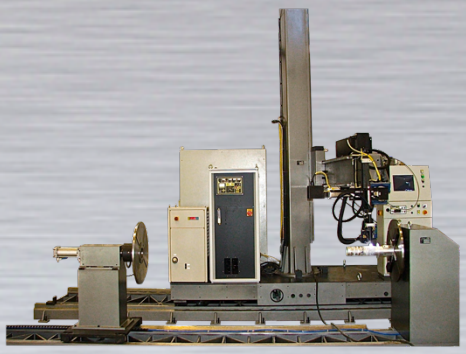

AMET® Inc., 355 Dividend Dr., Rexburg, ID 83440 USA - Tel: (208) 356-7274 - Fax: (208) 356 8932 - www.ametinc.com

Models

Precision Benchtop Lathe Systems

These lathes are designed and built for a high level of accuracy, versatility, and repeatability. They can be used for a wide range of applications with high or low production runs. With a small footprint, multiple lathes can be placed within a weld cell to optimize space and production of parts up to 18 in. (457 mm) in length with 16 in. (406mm) OD and maximum weight up to 250 lbs (113 kg).

Heavy-Duty Bench Lathe Systems

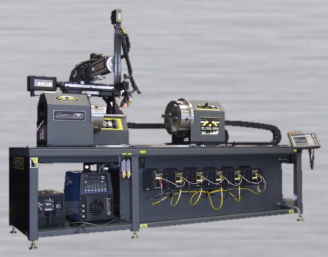

Like the Precision Benchtop Lathes, the Heavy-Duty Bench Lathes are designed and built for a high level of accuracy, versatility, and repeatability. These lathes simply have increased weight and part length capacities, up to 750 lb. (340 kg) weight and 60 in. (1524 mm) in length, without sacrificing any of the precision motion.

Industrial Weld Lathe Systems

Industrial weld lathe systems are used to produce high quality welds with minimum distortion on circumferential (girth) weld joints for a wide variety of parts and part shapes. These lathes can accommodate parts from 1100 lbs (500kg) to 22,000 lbs (10,000kg) with lengths from 23 inches (600mm) to 236 inches (6,000 mm). Single and multi-pass welding can be performed using GTAW, PAW, VPGTAW, VPPAW, GMAW, FCAW, or SAW welding. The weld lathe can be optionally fitted with two or more weld heads so multiple welds can be performed simultaneously.

AMET® Weld Lathe Solution Examples

AMET® GTAW Heavy-Duty Bench Lathe with Camera System and Manually Adjustable Weld Screens

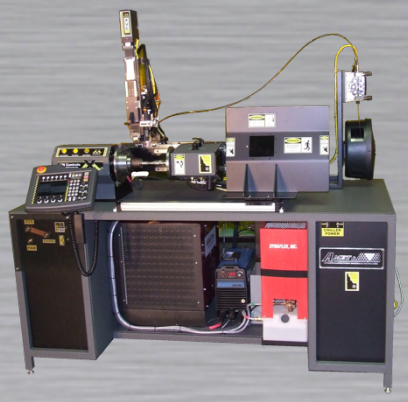

AMET® XM® PAW/GTAW Dual Process Precision Benchtop Lathe

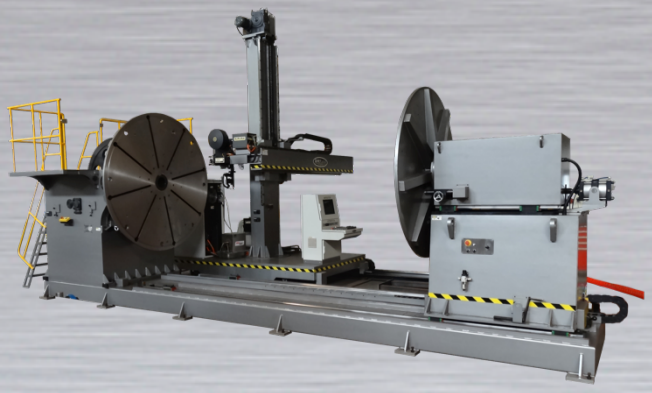

AMET® Large VPGTAW Industrial Weld Lathe with Custom Faceplates and Motorized Tilting Headstock.

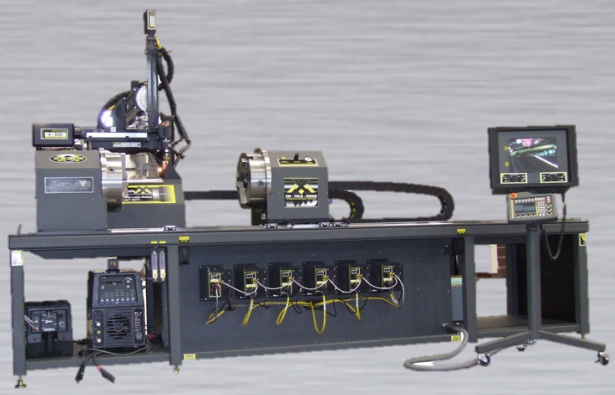

AMET® XM® GTAW Twin Drive Heavy-Duty Bench Lathe